TRIAD MAGNETICS

Wall Plug - Ins

WSU090-2000

Electrical Specifications (@25C)

1. Input Voltage rating: 100-240VAC, 50-60Hz
2. Input Voltage range: 90-264VAC
3. Input current: <0.5A(RMS) @ 115VAC*
4. Max Inrush Current: <80A peak @ 115VAC (Cold start)*
5. Output Voltage: 9VDC
6. Output Current: 2.0A
7. Regulation (line & load): ±5%*
8. Ripple & Noise: 150mVpk-pk Max*
9. No load power (stand by): <100mW*
10. Average Efficiency: ≥85.00%. Meets minimum level VI efficiency.*

Environmental Specifications

1. Operating Temperature Range: 0°C to +40° C @ full load
2. Storage Temperature Range: -20°C to 60°C
3. Humidity: 5% to 95%, Non-condensing

Reliability Specifications

1. Leakage Current: <0.25mA (264VAC)
2. Dielectric Strength (Hi-pot): 4242VDC/3secs., 5mA Max
3. Warranty: 5 years

Mechanical Parameters

Case Type: Thermoplastic molded enclosure.
Output Cord: 18 AWG, 5 Ft. Long Nom.*

Safety & EMI

ETL: 4002961 conforms to UL STD: 60950-1. Certified to CSA.STD C22.2 No. 60950-1 Class II, Double Insulated*
EMI standard: FCC part 15 class B
Over voltage and short circuit protected

Intertek
4002961

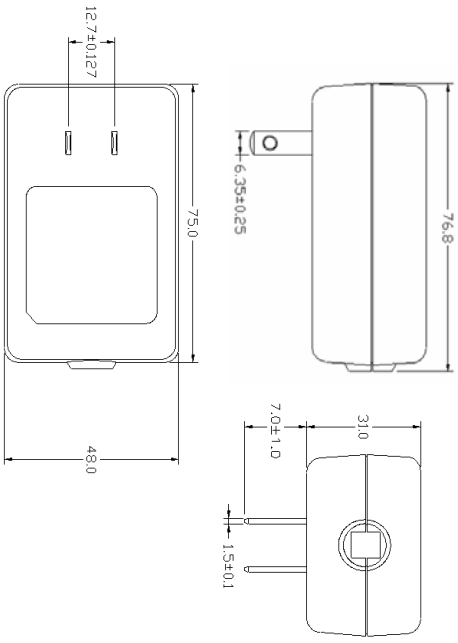

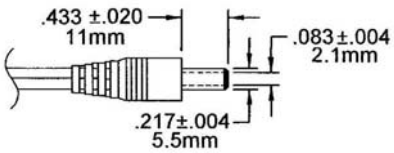

Dim.: mm

EISA 2007/CEC Compliance: All WSU Power Supplies manufactured after February 10, 2016 will meet the minimum efficiency levels for direct operation as defined by DOE Docket Number EERE-2008-BT-STD-0005-0219. Triad's level VI products will have date code no later than 1605 (YYWW) where 16 is the year and 05 is the 5th week of 2016. In accordance with DOE requirement the label will also contain the Roman numeral VI with a circle.

* These parameters were required to change in order to meet DOE's level VI efficiency requirements.

RoHS Compliance: As of manufacturing date February 2005, all standard products meet the requirements of 2011/65/EU, known as the RoHS initiative.

Upon printing, this document is considered "uncontrolled". Please contact Triad Magnetics' website for the most current version.

Web: www.TriadMagnetics.com
Phone 951-277-0757
Fax 951-277-2757

460 Harley Knox Blvd.
Perris, California 92571

Publish Date: February 17, 2016