SMD Current Sense Transformer

CSE5-100301

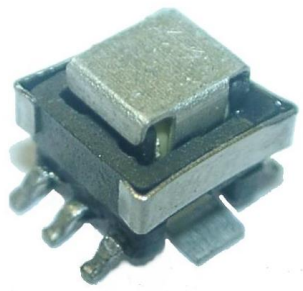

Description:

EE5 Surface mounting design
Height: 5.3mm Max
Optimal performance at 250 kHz and above
Primary Current Rating: 20 amps
Insulation Resistance: 10MΩ Minimum
Operating Temperature Range: -15°C to +105°C
Custom designs available
Energy Time (E.T.) = 16.2V µS Max

Application:

Ac current detection
Output supply for control circuit
Switching Power Supply

Electrical Specifications @ 25C

Turns N1:N2	Secondary Min Inductance (µH)	Secondary Max DCR (mΩ)	Color Code Dot
1:30	180	870	Purple

Mechanical:

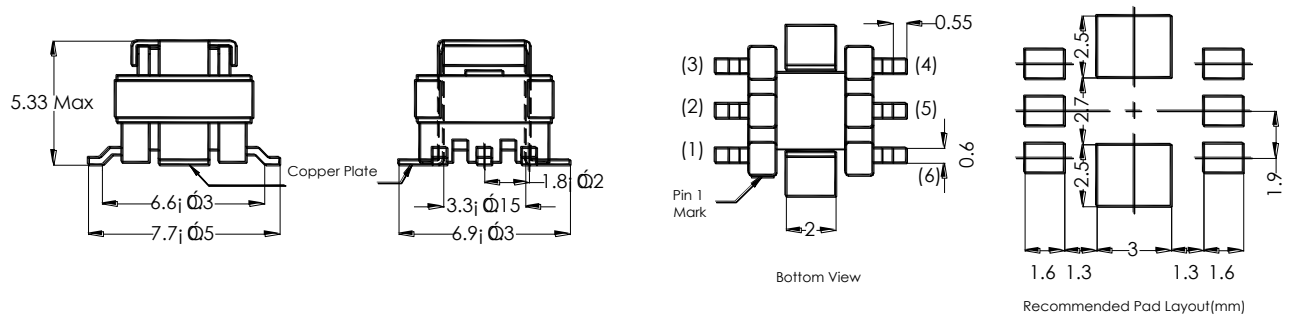

Packing:

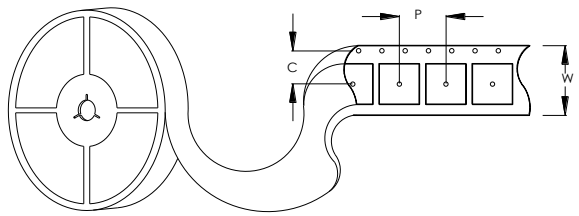

Carrier Dimension:
P=12mm,W=16mm, c=7.5mm
Quantity per reel=750pcs

Schematic:

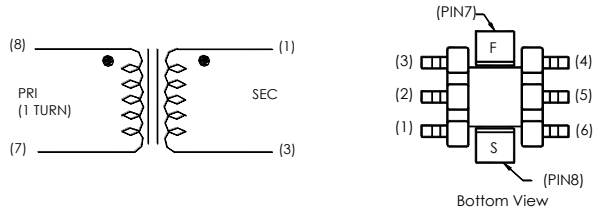

RoHS Compliance: As of manufacturing date February 2016, all standard products meet the requirements of 2015/863/EU, known as the RoHS 3 initiative.

* Upon printing, this document is considered “uncontrolled”. Please contact Triad Magnetics’ website for the most current version

web:www.TriadMagnetics.com
Phone 951-277-0757
Fax 951-277-2757

460 Harley Knox Blvd.
Perris, California 92571

Publish Date: January 29, 2025